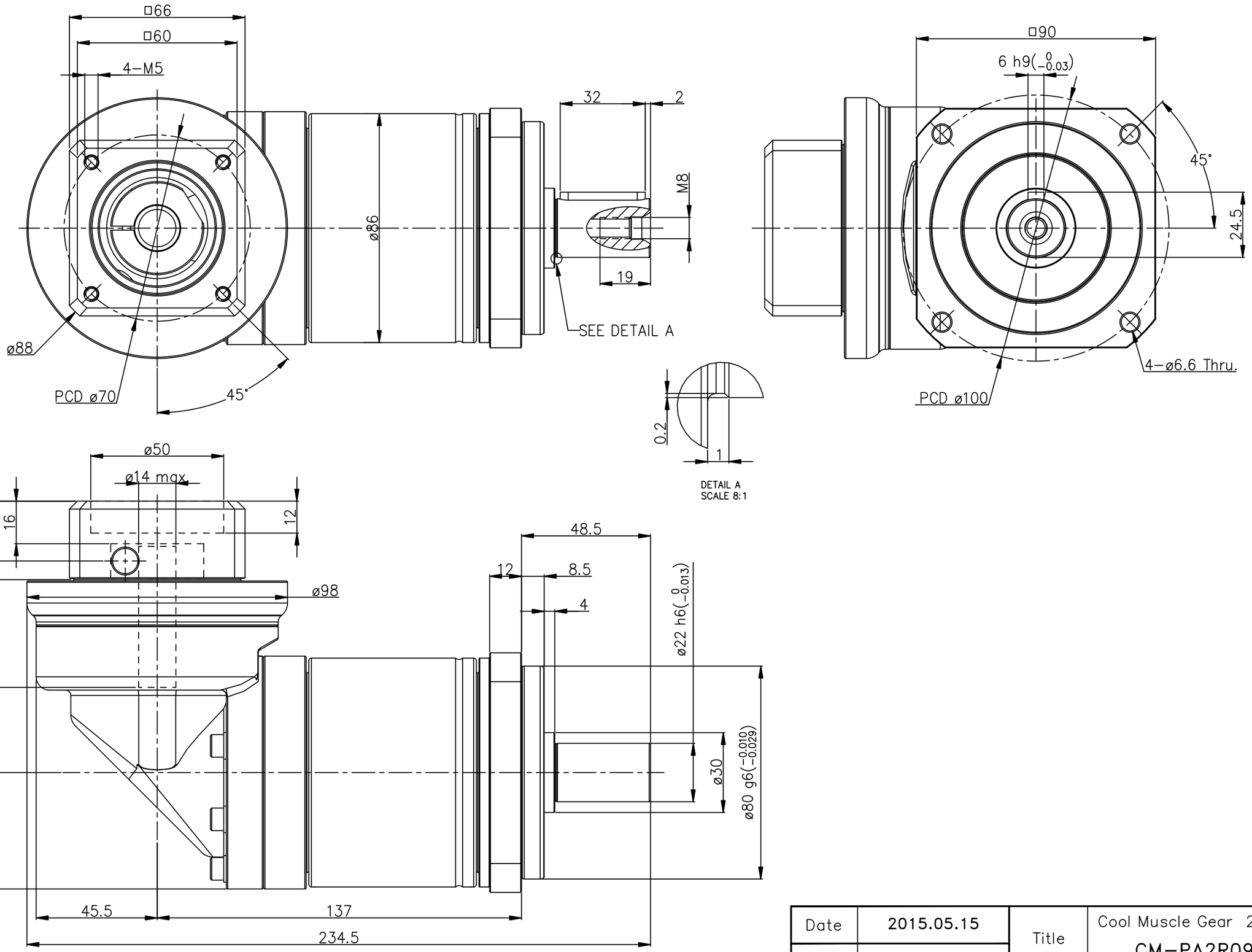

CM No.#		Conjunction Plate	Applicability By Ratio							
			15	16	20	25	30	35	40	50
CM2	60A40□	—								

Date	2015.05.15	Title	Cool Muscle Gear 2−stage CM−PA2R090
Scale	1 : 1		
Size	A2	Dwg No.	CMPA2R902−10
3RD Angle Projection		MUSCLE CO., LTD.	